SDSTM013

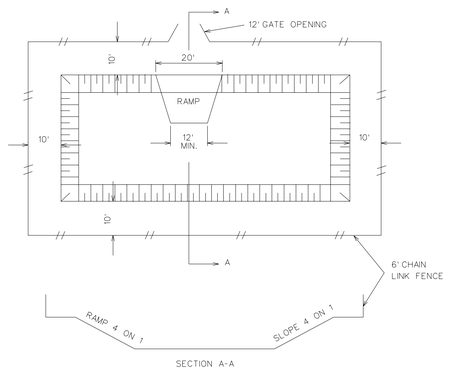

SECTION A-A

NOTES:

1. OVERFLOW PIPE TO BE PROVIDED AS CALLED FOR ON PLAN.
2. ENTIRE BASIN WITHIN FENCING TO BE TOPSOILED, SEEDED AND MULCHED OR SODDED WITH CLASS "B" SOD.
3. CONTRACTOR SHALL BE RESPONIBLE FOR DEWATERING OF THE BASIN UNTIL BASIN IS ACCEPTED BY THE CITY.
4. ALL INLET AND OUTLET PIPES TO HAVE BAR SCREENS AND GROUTED RIP-RAP AS REQUIRED, ALL FLAP GATES INSIDE FENCE.
5. ALL GATES CONSTRUCTED DIRECTLY IN FRONT OF A PAVED ROAD-WAY ARE TO HAVE A "ROAD ENDS" SIGN FASTENED SECURELY TO GATE
6. ELECTRICAL SERVICE TO BE PLACED INSIDE FENCING WHENEVER POSSIBLE.
7. CITY WILL PROVIDE NECESSARY PADLOCKS UPON COMPLETION & ACCEPTANCE OF THE BASIN

CITY OF STERLING HEIGHTS STANDARD DETAILS	RETENTION BASIN	DATE: 02/03/70	GLB
		REVISED: 1977,77,79,80	

SDSTM014

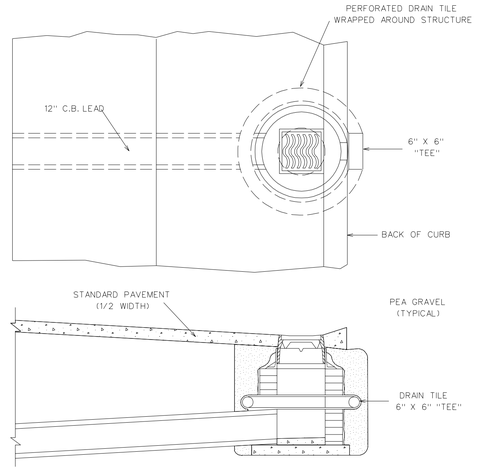

NOTES:

1. BOTTOM OF 6" DRAIN TILE TO MATCH TOP OF HIGHEST STORM SEWER PIPE ENTERING/EXITING STRUCTURE.
2. THIS DETAIL IS TYPICAL FOR ALL CATCH BASINS AND INLETS REQUIRING DRAIN TILE.
3. DRAIN TILE TO BE CORRUGATED PLASTIC TUBING, PVC TUBING MEETING ASTM F800 REQUIREMENTS OR BE TUBING MEETING AASHTO M 252 REQUIREMENTS WITH FOUR ROWS OF 5/16" DIAMETER PERFORATIONS.

CITY OF STERLING HEIGHTS STANDARD DETAILS	EDGE DRAINS	DATE: 02/18/70	GLB
		REVISED: 1978,79,88	

SDSTM017

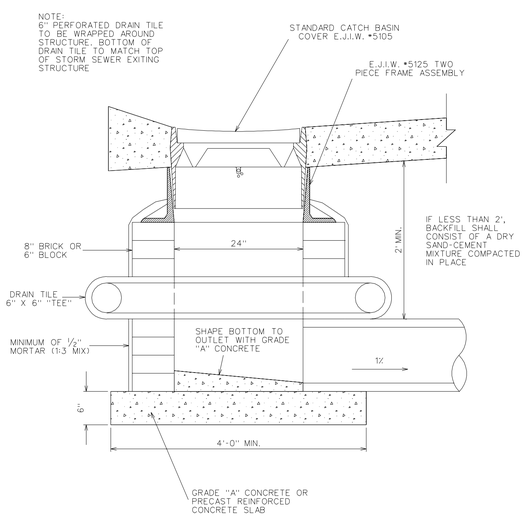

CITY OF STERLING HEIGHTS STANDARD DETAILS	STANDARD INLET BASIN	DATE: 01/16/70	GLB
		REVISED: 1978,79,80,88	

SDSTM012

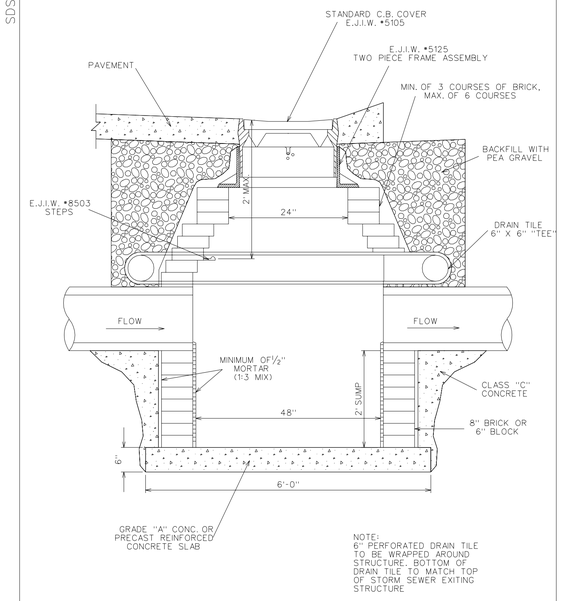

CITY OF STERLING HEIGHTS STANDARD DETAILS	PAVEMENT CATCH BASIN	DATE: 01/19/70	GLB
		REVISED: 1977,78,79,80,88	

SDSTM007

MANHOLE MATERIALS

MATERIAL	DEPTH	THICKNESS
BRICK	0'-11'	8"
	11'-16'	12"
	OVER 16'	16"
BLOCK	0'-16'	8"
	OVER 16'	12"

TRENCH WIDTH REQUIREMENTS

PIPE SIZE	TRENCH WIDTH
6" TO 12"	30" MAXIMUM
15" TO 30"	OUTSIDE DIAMETER + 12"
36" TO 60"	OUTSIDE DIAMETER + 18"
OVER 60"	OUTSIDE DIAMETER + 24"

CITY OF STERLING HEIGHTS STANDARD DETAILS	MANHOLE MATERIALS & TRENCH WIDTH	DATE: 06/30/70	GLB
		REVISED:	

SDSAN500

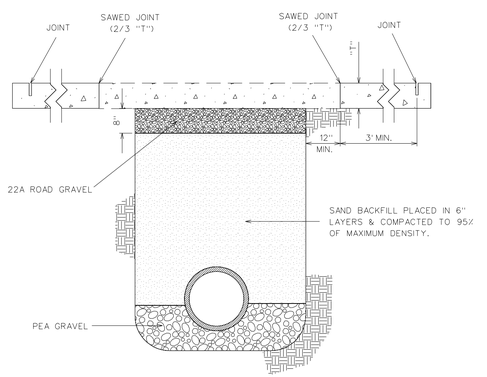

NOTES:

1. WHERE PAVEMENT REPLACEMENT DOES NOT IMMEDIATELY FOLLOW BACKFILL OPERATION, A TEMPORARY SURFACING SHALL BE PLACED AS DIRECTED BY THE ENGINEER.
2. ASPHALT FOR REPLACEMENT SHALL MEET CURRENT M.D.O.T. SPECS. FOR BITUMINOUS AGGREGATE SURFACE COURSE 4.11.
3. CONCRETE FOR REPLACEMENT SHALL MEET CURRENT M.D.O.T. SPECS. FOR HIGH EARLY STRENGTH CONCRETE.

CITY OF STERLING HEIGHTS STANDARD DETAILS	PAVEMENT REPLACEMENT	DATE: 02/17/70	GLB
		REVISED:	

SDSTM015

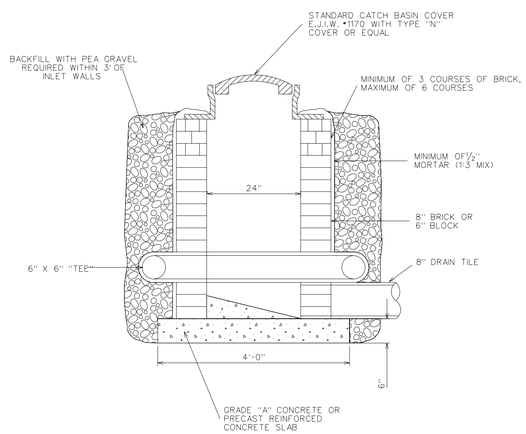

NOTE:
6" PERFORATED DRAIN TILE TO BE WRAPPED AROUND STRUCTURE. BOTTOM OF DRAIN TILE TO MATCH TOP OF STORM SEWER EXITING STRUCTURE.

CITY OF STERLING HEIGHTS STANDARD DETAILS	24" REAR YARD INLET	DATE: 01/12/81	DRJ
		REVISED: 03/11/88	

SDPAV010

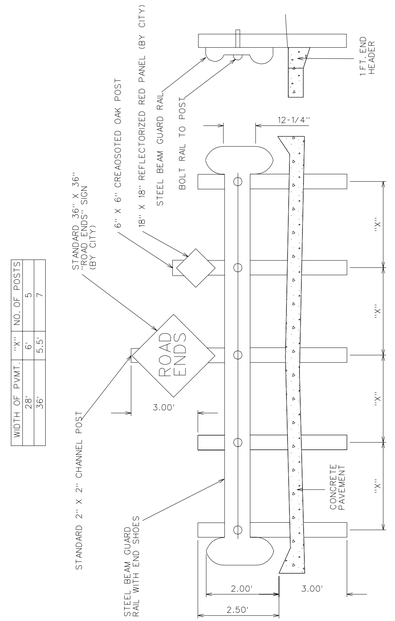

WIDTH OF PVMT.	"X"	NO. OF POSTS
28'	6'	5
36'	5.5'	7

NOTES:
1. STEEL 6" X 4" "H" BEAMS MAY REPLACE OAK POSTS/
2. CHANNEL TO BE WELDED TO STEEL POSTS OR BOLTED TO OAK POSTS.
3. GUARD RAIL AND FITTINGS TO CONFORM TO M.D.O.T. STANDARDS

CITY OF STERLING HEIGHTS STANDARD DETAILS	DEAD END BARRICADE	DATE: 01/20/70	GLB
		REVISED: 02/28/77	

REVISIONS

DESCRIPTION	DATE

SCALE: 1" = 50'	DRAWN: DWM
DATE: NOTED	CHECKED: GLB
FIELD BOOK:	APPROVED: TRD
PAGE:	CITY ENGINEER

CITY OF STERLING HEIGHTS
40555 UTICA ROAD
P.O. BOX 8009
STERLING HEIGHTS, MI 48311-8009
(586) 446-2489

PROJECT INFORMATION
LOCATION: CITY OF STERLING HEIGHTS
STATION: SECTION:
C.P. NO.:
FILENAME: F:\DRAW\DETAILS\DSHT05.DGN

STANDARD DETAILS STORM 2 OF 2

SHEET 5 OF 7