SDWTR011

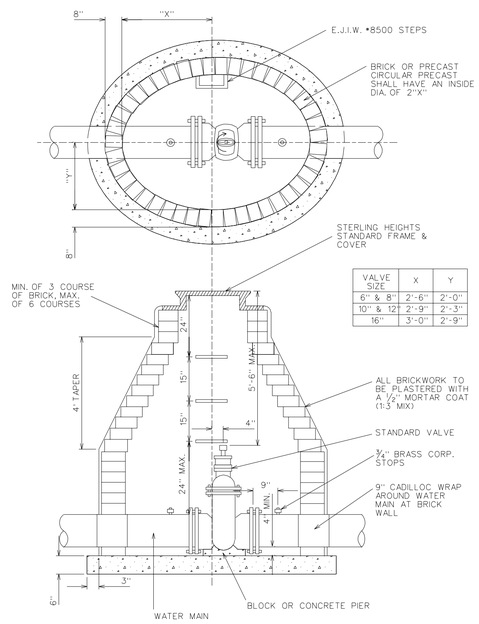


| VALVE SIZE | X | Y |
|---|---|---|
| 6" & 8" | 2'-6" | 2'-0" |
| 10" & 12 | 2'-9" | 2'-3" |
| 16" | 3'-0" | 2'-9" |

| | | | |
|---|---|---|---|
| CITY OF STERLING HEIGHTS STANDARD DETAILS | GATE VALVE AND WELL | DATE: 12/17/69 | GLB |
| | | REVISED: | |

SDWTR008

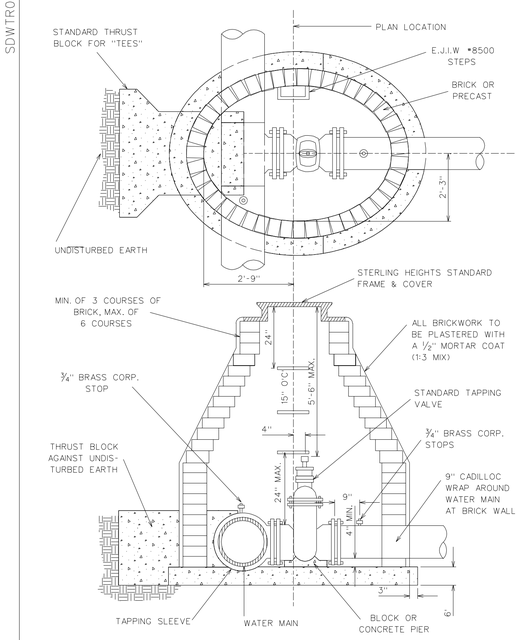


| | | | |
|---|---|---|---|
| CITY OF STERLING HEIGHTS STANDARD DETAILS | TAPPING SLEEVE VALVE & GATE WELL | DATE: 01/07/70 | GLB |
| | | REVISED: 02/23/77 | |

SDWTR009

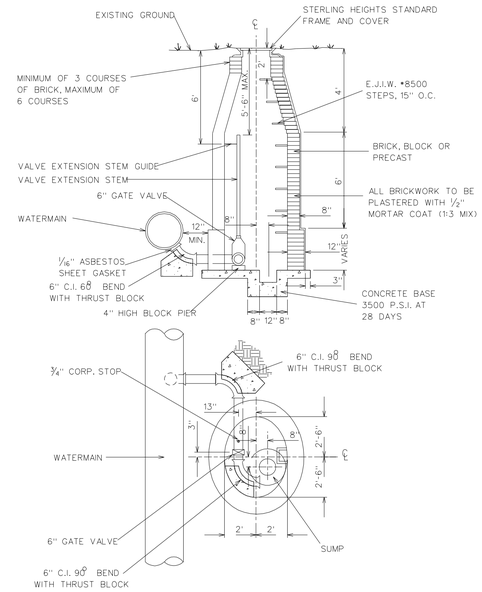


| | | | |
|---|---|---|---|
| CITY OF STERLING HEIGHTS STANDARD DETAILS | BLOW-OFF AND WELL | DATE: 01/09/70 | GLB |
| | | REVISED: | |

SDWTR006

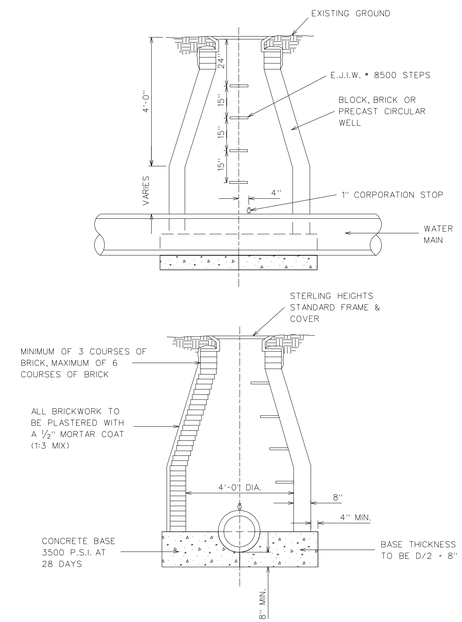


| | | | |
|---|---|---|---|
| CITY OF STERLING HEIGHTS STANDARD DETAILS | AIR RELIEF VALVE | DATE: 12/26/69 | GLB |
| | | REVISED: | |

SDWTR001

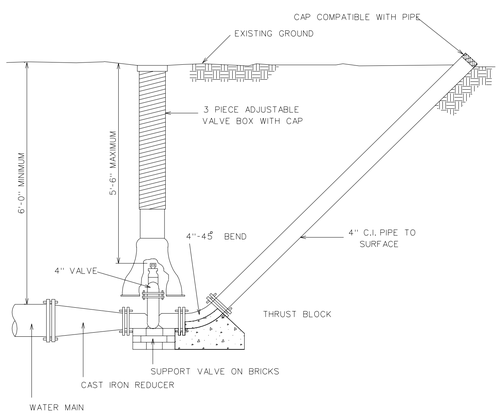


| | | | |
|---|---|---|---|
| CITY OF STERLING HEIGHTS STANDARD DETAILS | BLOW-OFF ASSEMBLY | DATE: 01/05/70 | GLB |
| | | REVISED: | |

SDWTR012

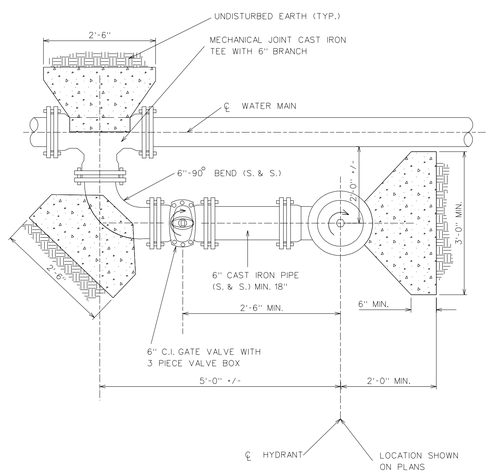


| | | | |
|---|---|---|---|
| CITY OF STERLING HEIGHTS STANDARD DETAILS | "C" HYDRANT CONNECTION | DATE: 12/09/69 | GLB |
| | | REVISED: 01/12/81 | |

SDWTR010

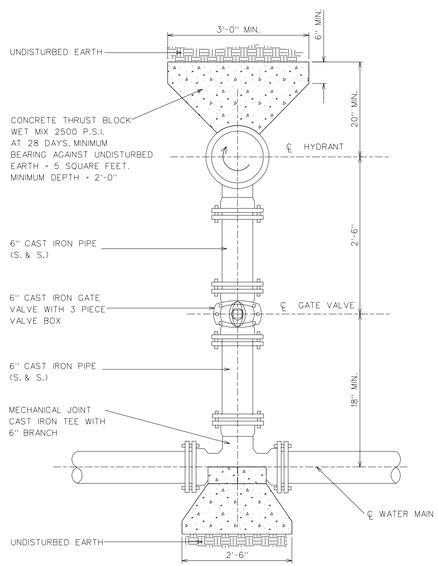


| | | | |
|---|---|---|---|
| CITY OF STERLING HEIGHTS STANDARD DETAILS | "S" HYDRANT CONNECTION | DATE: 12/18/69 | GLB |
| | | REVISED: 1977,81 | |

SDWTR013

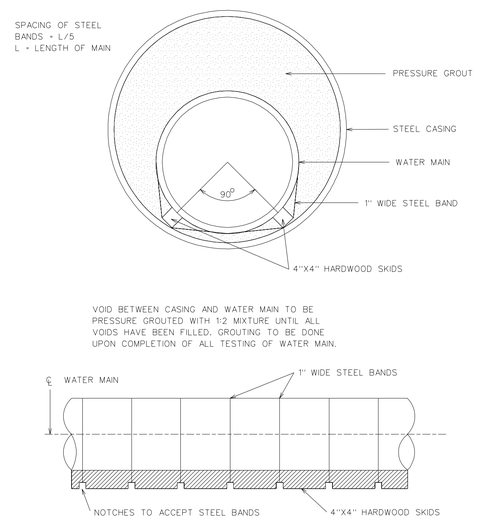


| | | | |
|---|---|---|---|
| CITY OF STERLING HEIGHTS STANDARD DETAILS | WATER MAIN TUNNEL DETAIL | DATE: 12/11/69 | GLB |
| | | REVISED: | |

REVISIONS

| DESCRIPTION | DATE |
|---|---|
| | |

| | |
|---|---|
| SCALE: 1" = 50' | DRAWN: DWM |
| DATE: NOTED | CHECKED: GLB |
| FIELD BOOK: | APPROVED: TRD |
| PAGE: | CITY ENGINEER |


CITY OF STERLING HEIGHTS
40555 UTICA ROAD
P.O. BOX 8009
STERLING HEIGHTS, MI 48311-8009
(586) 446-2489


PROJECT INFORMATION
LOCATION: CITY OF STERLING HEIGHTS
STATION: SECTION:
C.P. NO.:
FILENAME: F:\DRAW\DETAILS\DSHT06.DGN

# STANDARD DETAILS WATERMAIN 1 OF 2